A Mini Project Report on

Arduino based Driver Drowsiness Detection,Alerting & Speed Control System

Submitted for partial fulfillment of the requirements for the award of the degree of

BACHELOR OF TECHNOLOGY

in

ELECTRONICS AND COMMUNICATION ENGINEERING

Submitted By

Mr. P.Nikhil Reddy **19911A04N2**

Under the esteemed guidance of,

Mrs. K. Tarangini
Assistant professor

Department of Electronics and Communication Engineering

Vidya Jyothi Institute of Technology

(An Autonomous Institution)

(Accredited by NAAC & NBA, Approved by AICTE New Delhi & Permanently Affiliated to JNTUH)

Aziz Nagar Gate, C.B. Post, Hyderabad-500 075

2021-2022

Vidya Jyothi Institute of Technology

(An Autonomous Institution)

(Accredited by NAAC & NBA, Approved by AICTE New Delhi & Permanently Affiliated to JNTUH)

Aziz Nagar Gate, C.B. Post, Hyderabad-500 075

Department of Electronics and Communication Engineering

CERTIFICATE

This is to certify that the project report entitled **Arduino Based Driver Drowsiness Detection Alerting & Speed Control System** is being submitted by **Mr. P.Nikhil Reddy (19911A04N2)** of B.Tech IV- I semester of Electronics & Communication Engineering is a record Bonafide work carried out by them. The results embodied in this report have not been submitted to any other University for the award of any degree.

INTERNAL GUIDE
Mrs.K.Tarangini
Assistant Professor
Department Of ECE

HEAD OF THE DEPARTMENT
Dr.S .Thulasi Prasad
Professor & HOD
Department of ECE

EXTERNALEXAMINER

DECLARATION

This is to certify that the work reported in the present project entitled **Arduino Based Driver Drowsiness Detection Alerting & Speed Control System,** is a record of work done by us in the Department of Electronics and Communication Engineering, Vidya Jyothi Institute of Technology, Jawaharlal Nehru Technological University, Hyderabad. The reports are based on the project work done entirely by us and not copied from any other source.

Project Associates:

Mr. P.Nikhil Reddy **19911A04N2**

ACKNOWLEDGEMENT

We would like to express our sincere gratitude to our project internal guide

Mrs. K.Tarangini who has guided and supported us through every stage in the project we are really grateful to our **HoD Dr. S. Thulasi Prasad** for his time to time, much needed valuable guidance throughout our study.

We express our hearted gratitude to our principal **Dr. A.Padmaja** for diving us spontaneous encourage for completing the project.

We thank **Dr. E.Sai Baba Reddy**, Director of Vidya Jyothi Institute of Technology for encouraging us in the completion of our project.

It is our privilege to express our gratitude and indebtedness to our Secretary& Correspondent of Vidya Jyothi Institute of Technology **Shri. P.Rajeshwar Reddy** for his moral support

We express our heartful thanks to Staff of Electronics and Communication Department, Vidya Jyothi Institute of Technology for helping us in carrying out our project successfully.

Project Associates:

Mr. P.Nikhil Reddy **19911A04N2**

INDEX

	Page No
CHAPTER 1 INTRODUCTION	
1.1 Introduction	8
1.2.Motivation Of The Work	9
1.3 Problem Statement	9
1.4 Objective	9
CHAPTER 2 LITERATURE SURVEY	10
CHAPTER 3 SYSTEM DESIGN AND ANALYSIS	11
CHAPTER 4 WORKING PRINCIPLE OF PROPOSED SYSTEM	14
CHAPTER 5 RESULT ANALYSIS	16
CHAPTER 6 ADVANTAGES AND APPLICATIONS	17
CHAPTER 7 CONCLUSION AND FUTURE SCOPE	18
REFERENCES	19

LIST OF FIGURES

Fig No.	Title	Page No.
Fig:3.1	ATmega328p Micro Controller	11
Fig:3.2	16x2 LCD Module	12
Fig:3.3	MQ3 Alcohol Sensor	12
Fig:3.4	Interfacing With Arduino	12
Fig:3.5	Googles with Ir Sensor	12
Fig:3.6	Infrared Sensor	12
Fig:3.7	Proposed Block Diagram	13
Fig:4.1	Working Of Ir Sensor	15
Fig:4.2	Interfacing Of lcd With Arduino	15
Fig:5.1	Model Structure	16
Fig:5.2	Output Driver Sleeping	16
Fig:5.3	Output Driver Is Drunk	16

ABSTRACT

Driver sleepiness is a common cause of accidents. It is currently one of the major factors in traffic accidents. According to the most recent statistics, many accidents were brought on by drowsy driving. Thousands of people are losing their lives each year as a result of car accidents caused by sleepy drivers. Over 30% of accidents are brought on by tiredness. A technology that recognises drowsiness and warns the driver is needed to prevent this and save lives. In this research, we describe a method for detecting driver fatigue.

Chapter 1

Introduction

1.1 Introduction

Accidents are rising rapidly these days, and numerous technologies are being developed to lessen them. In this initiative, we offer strategies for preventing collisions by using eye blinks, which cause the car to be halted right away and informed if necessary. This project is divided into two pieces. One is the vehicle's alcohol portion, and the other is the eye blink area of the goggle goggle section. The eye blink sensor is positioned close to the eye to detect the number of blinks. This data is delivered as pulses to the microcontroller. The microcontroller compares this data with a typical eye blink This action is made possible by the driver circuit attached to the vehicle motor, which uses this data to show the alert message in the LCD as programmed, while also sounding the buzzer alert. If any unexpected scenario develops, the car is halted with an alarm indication. Accidents are rising rapidly these days, and numerous technologies are being developed to lessen them. In this initiative, we offer strategies for preventing collisions by using eye blinks, which cause the car to be halted right away and informed if necessary. This project is divided into two pieces. The first is the section on alcohol in the Another one is the eye blink section, which is found in the goggle goggle part. The eye blink sensor is situated close to the eye to sense the number of blinks, and this information is communicated to the microcontroller in the form of pulses. This operation is made possible by the driver circuit connected to the vehicle motor, which uses this information to display the alert message in the LCD as programmed, while also sounding the buzzer alert. The microcontroller uses this information to compare with the normal eye blink programmed in the chip, and if any abnormal situation arises, the vehicle is stopped with an alarm indication..

In 2018, 1,643 traffic accidents involving drunk drivers occurred. Therefore, utilising the eye blink sensor and the alcohol sensor, respectively, can help prevent accidents caused by tiredness and alcohol intake. As a result, the car slows down and stops when they are seen, preventing rash driving. Eye blink sensors help stop accidents caused by drowsy drivers. The driver is required to wear the eye blink sensor frame while driving, and the blink must last for a few seconds in order to identify tiredness. The eye-blink sensor operates by shining infrared light on the area around the eye and eyelids, then A phototransistor and differentiator circuit are used to keep track of variations in the reflected light. The exact functionality substantially depends on where and how the emitter and detector are pointed in relation to the eye. The Arduino UNO is connected to the sensor.

1.2 Motivation For The Work

In today's technologically advanced society, private transportation is rapidly expanding.When travelling a long distance, driving will be tiresome and boring. Long distance driving without adequate rest and sleep is one of the key factors contributing to the driver's lack of attentiveness. Driving when drowsy is possible for tired drivers. Drowsiness can cause severe and sometimes fatal mishaps in just a few fractions of a second. Continuous monitoring of the driver's attentiveness is necessary to prevent incidents of this nature, and the driver should be warned if sleepiness is detected. By doing this, we can significantly lower the amount of accidents and thereby save lives.

1.3 Problem statement

The cause of a lot of traffic accidents is drowsy driving. By keeping an eye on the driver with an IR sensor, drowsiness can be identified. The overarching goal is to develop a model that can detect driving while fatigued. When an eye is close, an IR sensor continuously emits rays that are reflected and picked up by a photodiode receiver. The car will signal the driver through a sound and come to a complete stop if the blinking is excessive and the eye is closed for an extended period of time.

1.4 Objective

In this project, we want to create and develop a system that can tell if a driver is feeling tired or exhausted by using an IR sensor. Using a sensor, we can see someone's eyes and tell how long a driver's eyes have been closed. The system's built-in buzzer will sound an alarm to wake the driver if their eyes were closed for longer than three seconds. Additionally, to determine whether the driver is intoxicated or not, we use the MQ3 alcohol sensor. The car comes to a stop after sensing the presence of alcohol in the air.

Chapter 2

Literature Survey

The Driver Drowsiness Detection, Alerting & Speed Control System's many approaches are described in the literature review. Below is a brief summary of the numerous techniques provided by various authors..

Arun Sahayadhas and Kenneth Sundaraj produced it. It talks about the following measurements: (1) those that are related to vehicles; (2) those that are behavioural; and (3) those that are physiological. A thorough examination of these measurements will shed light on the existing systems, the problems they are currently experiencing, and the improvements that must be made in order to create a reliable system. In this study, we review these three sensor-based measurements and discuss their benefits and drawbacks. It is also described how tiredness has been experimentally altered in various ways. Several traffic collisions might potentially be avoided

Real-time driver drowsiness detection and alert system based on Arduino Dr. Lokesha M. and Lestin Jills Joseph published this paper. This proposed design aims to identify driver drowsiness to reduce accidents and boost highway safety. On an Arduino microcontroller board based on the Atmega328P, a method for identifying driver fatigue or drowsiness is created for real-time monitoring. A mobile device with an Android operating system can display the readings obtained from the many sensors utilised in this project. It has a relay circuit to prevent the driver from operating the vehicle if alcohol has been consumed, as well as a MQ-2 alcohol gas sensor to detect alcohol if it has been consumed by the driver. MPU-6050 Micro-Electro-Mechanical System (MEMS) accelerometer and gyroscope for detecting head nodding

In recent years, image processing techniques have been used to identify driver tiredness. The motorist is considered to be drowsy if their eyes are closed for a predetermined amount of time. As a result, we learn about the driver's health and the vehicle's speed is decreased. The number of fatalities from traffic accidents is rising daily. One of the most common causes of car accidents is drowsy driving. a technique for avoiding and detecting sleepy driving. They used an image processing method to find the driver's blinking eyes.

In this manner, we can develop a comprehensive safety gadget to warn sleepy drivers, thus saving many priceless human lives. By comprehending the psychological state of drivers, fatal road accidents can be easily averted. The majority of traffic accidents happen at night because of tiredness. This project offers a sleepiness detection device for the driver that monitors eye blinks. Normal eye blinking has no impact on the system's output. When the driver closes his eyes for longer than five seconds, the webcam linked to the Raspberry Pi serving as the gateway will take a picture of the driver and send it to the web application

Chapter 3

System Design and Analysis

The system architecture of the driver drowsiness alert system is shown in the figure there are 2 sensors are used namely: eye blink (reflection sensor) and alcoholic sensors (MQ-3) are used for the drowsiness detection. These outputs from the sensors are connected to the Arduino Uno.

1.Microcontroller unit

2.Driver unit

3.Alarm unit.

4.LCD

3.1 Arduino Uno Board:

A good approach to start using embedded electronics. The Arduino Uno R3 is a microcontroller board based on a detachable, dual-inline-package (DIP) ATmega328 AVR microprocessor. It is the third and most recent revision of the Arduino Uno. 20 digital input/output pins are present (of which 6 can be used as PWM outputs and 6 can be used as analogue inputs). It may be programmed using the user-friendly Arduino computer programme. Since the Arduino has a large support network, using the Arduino Uno is relatively simple.

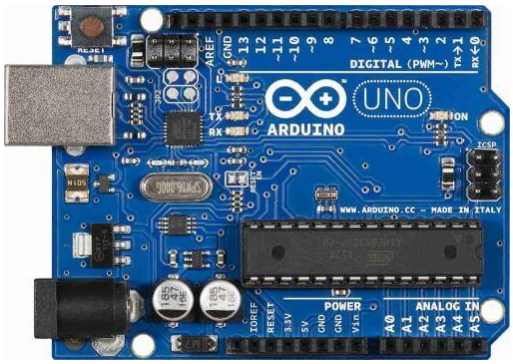

Fig:3.1 ATmega328p Microcontroller

3.2 Lcd

LCD is a displaying device used to display the sensors values and microcontroller actions. It is a flat case we are using 16x2 display.

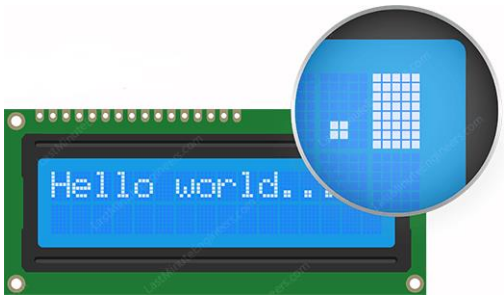

Fig:3.2 16x2 LCD module

3.3.Alcoholic Sensor

In this project, a gas sensor is used for measuring alcohol content released from drivers mouth. It is electrochemical gas sensor that measures the concentration of a target gas by oxidizing or reducing the target gas at an electrode and measuring the resulting current.

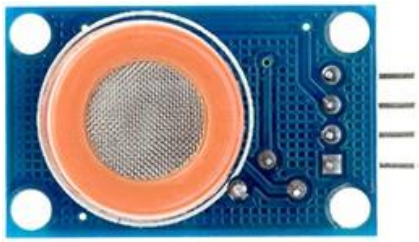

Fig:3.3 MQ3 Alcohol Sensor

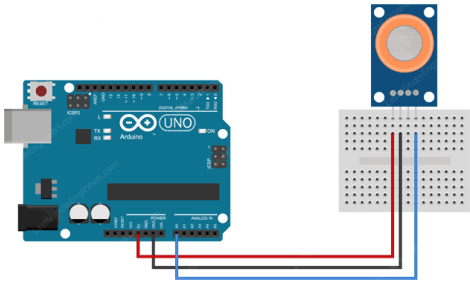

Fig:3.4 Interfacing with Arduino

3.4 Eye Blink Sensor:

The eye or eyelid area is illuminated with infrared light to activate this sensor. A phototransistor and differentiator circuit are then used to keep track of variations in the reflected light. The exact functionality greatly depends on where and how the emitter and detector are pointed in relation to the eye

Fig:3.5 Googles With IR Sensor

Fig:3.6 IR Sensor

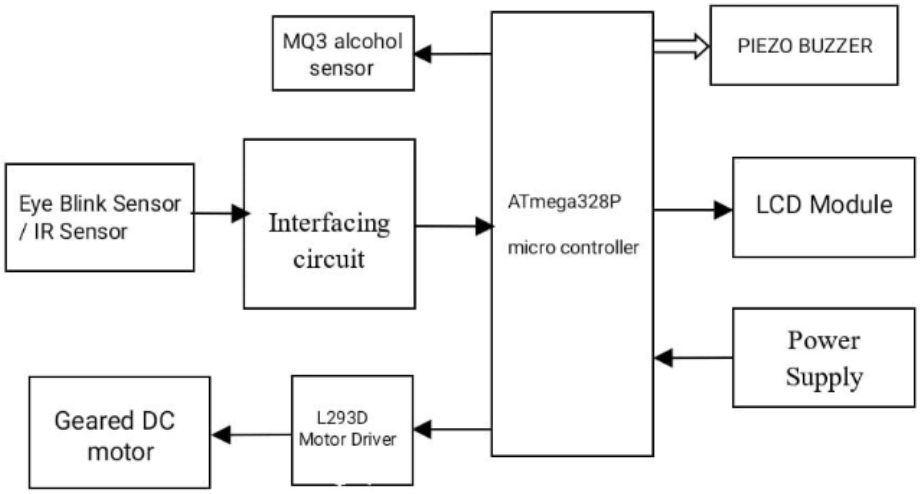

Fig:3.7 Proposed Block Diagram

The components used in this system are

Hardware Used:

- Ir sensor
- Arduino uno
- 16/2 lcd module
- Piezo Buzzer
- Dc gear motor
- L293d motor driver
- MQ3 Alcohol sensor
- Power supply
- Battery
- Connecting wires

Software Used:

- Embedded C
- Arduino Compiler

Chapter 4

Working Principle of Proposed System

An IR-based eye blink sensor is used to track the driver's blinking eyes. As the eye blinks, the disparity across the eye changes. If the eye is closed, the output is high; otherwise, the output is low. It shows whether an eye is in an open or closed state. The circuit receives the IR output to indicate the alarm. A warning signal will be sent by the controller and displayed on the liquid crystal display panel. When the driver nods off while driving, the buzzer that is placed nearby will sound and alarm him. The interior lighting of the car will either be ON or OFF depending on the amount of light, which reduces power consumption.

4.1 MQ3 Alcohol Sensor

One of the MQ sensor series' most widely used sensors is the MQ3. It is a sensor of the Metal Oxide Semiconductor (MOS) variety. Because sensing is based on the change in resistance of the sensing material when exposed to alcohol, metal oxide sensors are also known as chemiresistors. Alcohol concentrations can therefore be determined by integrating it into a straightforward voltage divider network. The MQ3 alcohol sensor uses 5V DC and consumes about 800mW. Alcohol concentrations between 25 and 500 ppm are detectable by it. Here are the detailed requirements.

MQ3 Alcohol sensor specifications

Operating voltage : 5V

Load resistance : 200KΩ

Heater resistance: 33Ω ± 5%

Heating consumption: <800mw

Sensing Resistance:1 MΩ – 8 MΩ

Concentration Scope:25 – 500 ppm

Preheat Time: Over 24 hour

4.2 Ir sensor

The detector is merely an IR photodiode, while the emitter is merely an IR LED (Light Emitting Diode). The same wavelength of infrared light that an IR LED emits may be detected by a photodiode. The resistances and output voltages when IR light strikes the photodiode will vary proportionally to the intensity of the IR light received. An infrared source, a transmission medium, an optical component, infrared detectors or receivers, and signal processing are the five fundamental components of a conventional infrared detection system. Infrared sources include infrared lasers and LEDs of a certain wavelength. Vacuum, atmosphere, and optical fibres are the three primary infrared transmission medium types. In order to limit or focus infrared radiation, optical components are required spectral reaction.

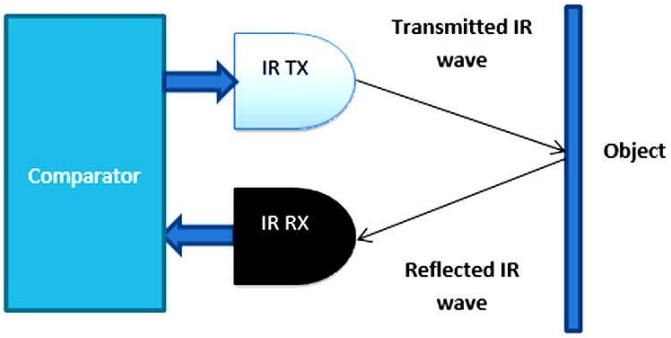

Fig:4.1 Working of IR sensor

4.3 16x2 lcd interfacing

Not only 162(1602), but all character LCDs (such as 164, 161, 204, etc.) based on Hitachi's HD44780 parallel interface LCD controller chip. Since the Arduino community has already created a library to manage HD44780 LCDs, they can be quickly interfaced. Connect Pin 3 on the LCD, which regulates the display's contrast and brightness, first. Link a 10K potentiometer between 5V and GND for precise contrast adjustments, and connect the potentiometer's centre pin (the wiper) to pin 3 on the LCD. using a potentiometer to rotate a knob to change the LCD contrast The end! As soon as you power on the Arduino, the backlight will start to glow. And The first line of rectangles ought to appear as you turn the potentiometer's knob. Finally, the output is visible on the screen.

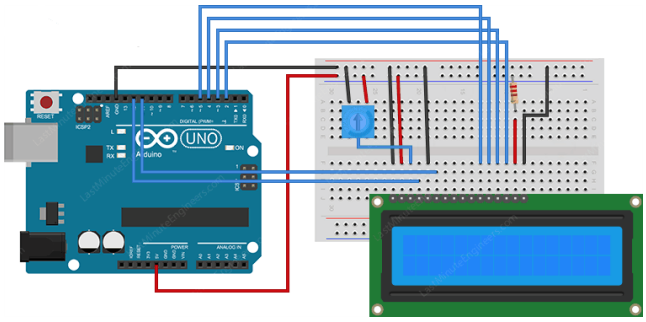

Fig:4.2 Interfacing of LCD with Arduino

Chapter 5

Results And Analysis

Here we can see the result or output of the project which displays sleeping on the lcd screen whenever the eye is closed. It shows the driver is drunk when its crosses limit.of 300 and gives the output as heavy

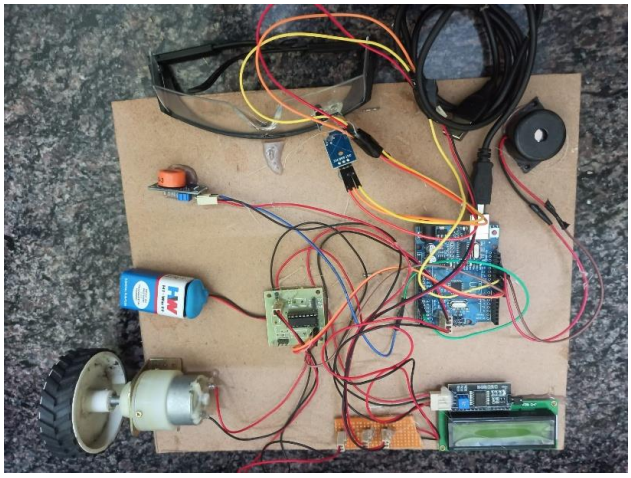

Fig:5.1 Model Structure

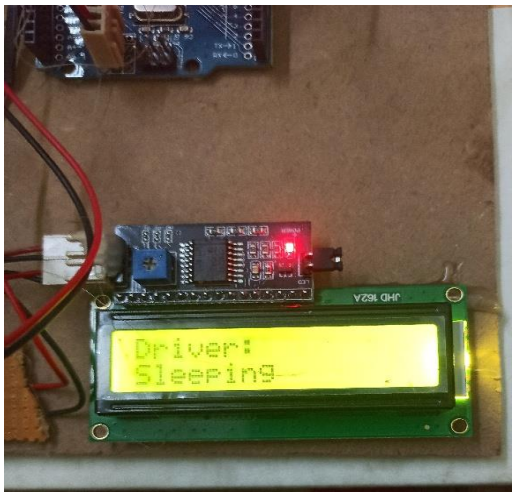

Fig:5.2 Output Driver sleeping

Fig:5.3 Output Driver Is Drunk

Chapter 6

Advantages And Applications

- Commercial trucks can use it, and accidents will be decreased.
- For large, heavy vehicles, this method is particularly effective. Since extended driving stretches are a problem for drivers.
- This device aids in preventing drowsy driver-related car accidents.
- Real-time alarms are used to correct the discovered abnormal behaviour.
- The component quickly creates an interface with other drivers.
- By informing the driver via the alarm system, his life may be saved.
- The vehicle's speed can be managed.
- Accidents can be decreased to preserve traffic management.
- Practical in nature

6.1 Applications

- There are numerous uses for the sleepiness detecting system. Heavy-duty vehicles like trucks, buses, and cranes are one among them.
- It can be utilised by truck and bus drivers who spend a lot of time on the road. Drivers of public transportation vehicles might use it to guarantee the security of the passengers.
- This technique can be used by the driver of high load lifting equipment, such as cranes, to reduce buses, and cranes are one among them.

Chapter 7

Conclusion And Future Scope

The drowsiness detection system has the ability to instantly identify drowsiness. The motorist can avoid being sleepy while driving thanks to a technology that can tell the difference between normal eye blinking and drowsiness. The device functions well even when the driver is wearing glasses and in poor light. The monitoring device can determine if the eyes are open or closed. A warning signal is sent when the eyes are closed for an extended period of time. The system's main objective is to assess the driver's level of tiredness. Drowsiness is recognised based on the driver's eye movements, and if the driver blinks their eyes, an alarm is created to warn them driver and to slow down the car while also signalling the parking light. This will decrease the number of accidents and protect the driver and the vehicle. Only opulent, expensive cars feature a driver and vehicle security system. Driver security and safety can be accomplished in a regular car using eye detection. The warning system is also built, the driver's tiredness is assessed, and the driver's drowsiness is identified. Eye blinking is explored in this work in relation to the prevention of accidents brought on by drowsiness, and a corresponding system was created. Tests on the project were successful. modern ICs and with the aid taking advantage of developing technologies like GSM and GPS, the project has been carried out successfully.

7.1 Future Scope

Through the use of digital image processing techniques, we may expand the project's future scope. Since it will be functional over long distances and simple to use, we can place it in cars and other vehicles and occasionally utilise cameras to recognise our faces and facial expressions. the line of sight can be blocked by equipment while utilising an IR sensor; however, in the future, the line of sight will be unobstructed and unrestricted when using a camera. The proportions of our eyes and lips can be marked on the model using image processing on a Raspberry Pi, so that when you close your eyes, the output changes and something happens the vehicle's speed will decrease and the driver will become more aware as a result of the alarm, automatically lowering the risk of accidents.

References

1. C.prabha, r.sunitha, r.anitha "automatic vehicle accident detection and messaging system using gsm and gps modem", ijareeie,vol.3, issue7, pp:10723 – 10727, july 2014.

2. S. Gupta, k. Sharma, n. Salvekar and a. Gajra, "implementation of alcohol and collision sensors in a smart helmet," 2019 international conference on nascent technologies in engineering (icnte), navi mumbai, india, 2019, pp. 1-5, doi: 10.1109/ icnte44896.2019. 8945979.

3. Vardhini, P.A.H., ravinder, m., reddy, p.s., & supraja, m.(2019). Iot based wireless data printing using raspberry pi. Journal of advanced research in dynamical and control systems, 11(4 special issue), 2141– 2145.

4. R s tomar, shekhar verma, and g s tomar, "neural network based lane change trajectory predictions for collision prevention", ieee international conference on computational intelligence and communication networks (cicn), pp 566-569 oct 2011.

5. Pandurang n. Kathar1, prof.D.l.bhuyar2 "design and implementation of driver drowsiness and alcohol intoxication detectionusing raspberry pi" in international journal of innovative research in computer and communication engineering (an iso 3297: 2007 certified organization) vol. 4, issue 8, august 2016 ,pp.14617-14625.

6. Supraja a1, bhanu sri a2, mary posonia a3"drunk and drive detection using iot"in international journal of pure and applied mathematics volume 118 no. 20, 2018, pp. 4304-4306.

7. Nagalaskhmi ts, nirmala l,akash soragaon "raspberry pi based embedded system for vehicle automation over internet" in international journal of advanced research in computer and communication engineering iso 3297:2007 certified, vol. 5, issue 12, december 2016 pp. 255-259